FIRST TEAM SPORTS INC.
HUTCHINSON, KS 67501
First Team Dealer: Tom Nicotera
Toll Free: 877-272-5430 / Cell: 858-692-1532
www.institutionalsportsequipment.com
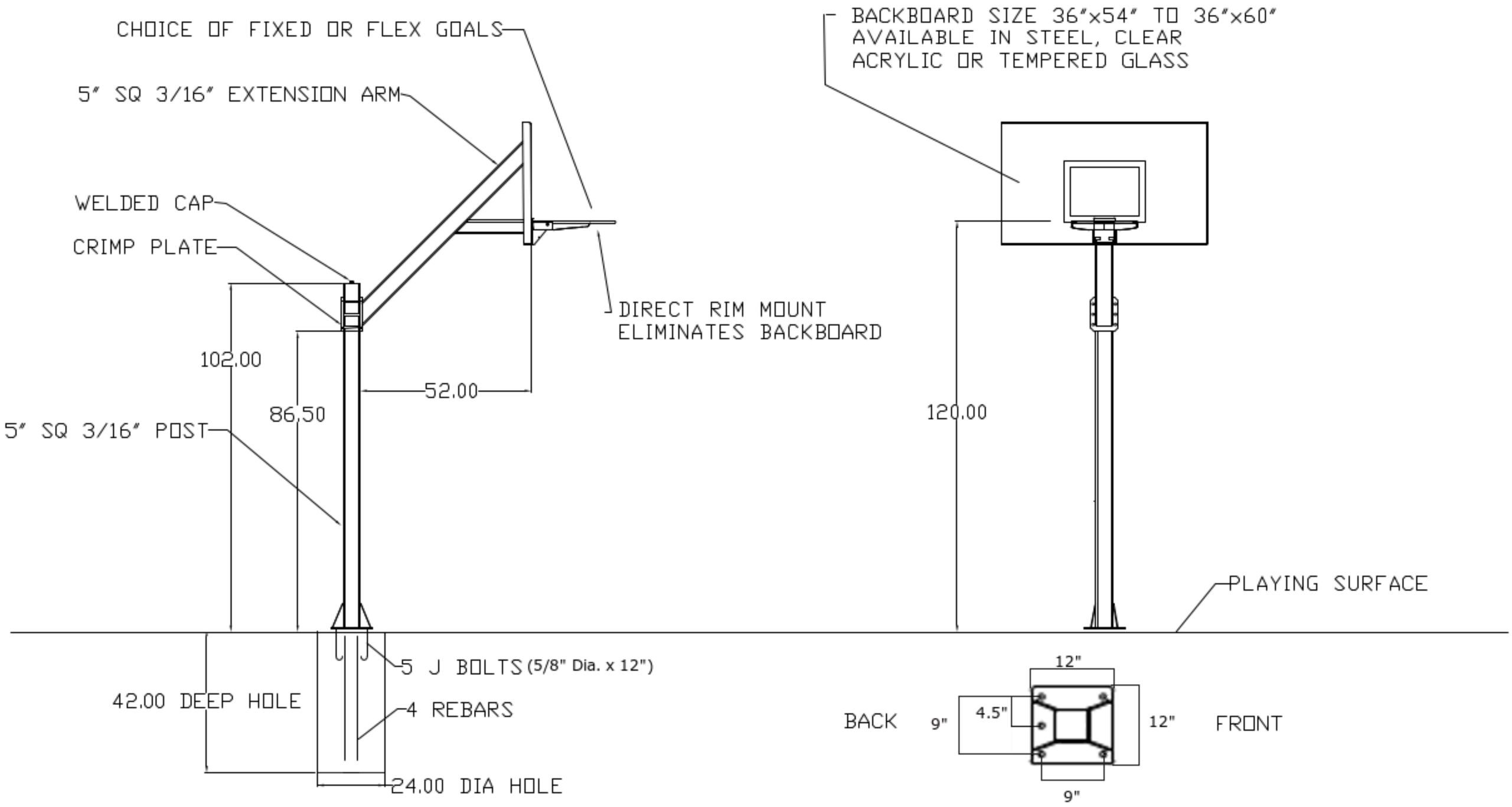
# LEGEND JR BP BASKETBALL GOAL
# BOLT DOWN POST
# PRODUCT SUBMITTAL